PROPRIETARY AND CONFIDENTIAL
THE INFORMATION CONTAINED IN THIS DRAWING IS THE SOLE PROPERTY OF BPLUS TECHNOLOGY CO., LTD. ANY REPRODUCTION IN PART OR AS A WHOLE WITHOUT THE WRITTEN PERMISSION OF BPLUS TECHNOLOGY CO., LTD. IS PROHIBITED

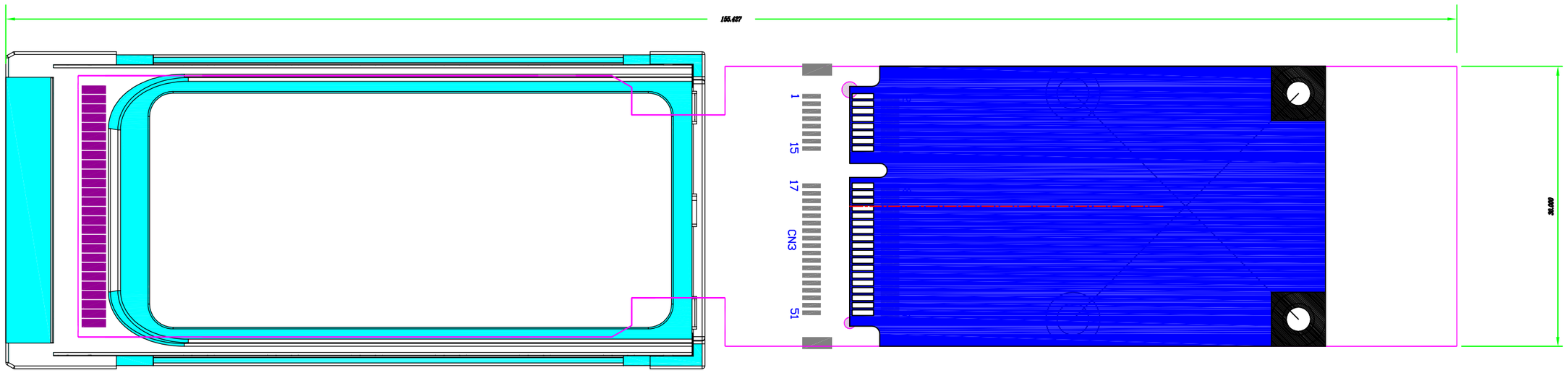

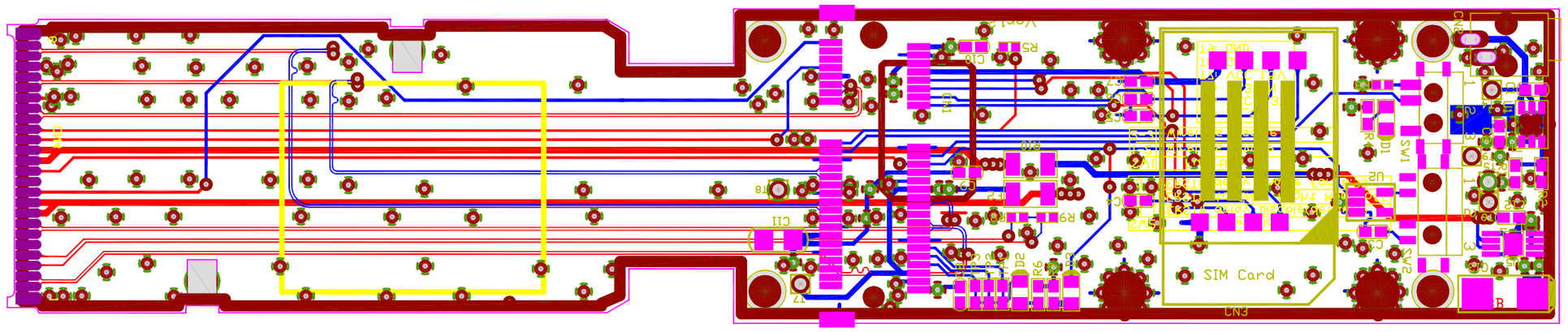

Layer1: TOP layer (GTL)
Layer2: GND (GP1)
Layer3: POWER (GP2)
Layer4: BOT layer (GBL)

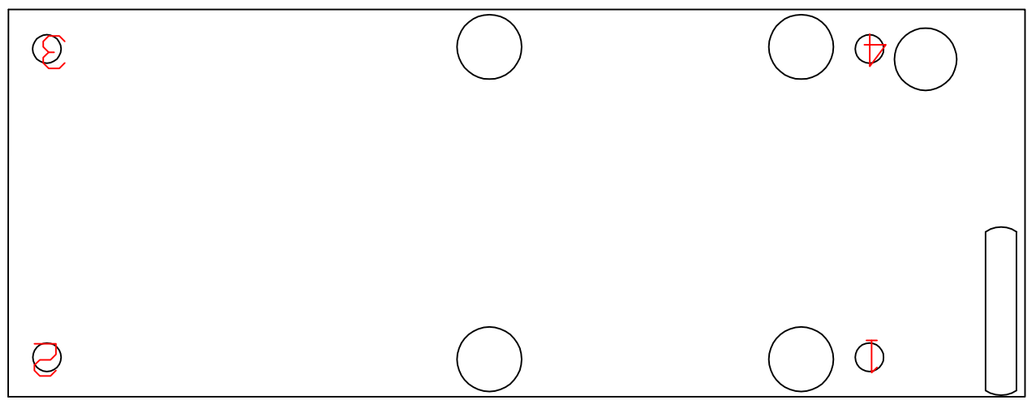

4Layer PCB thinkless 1.0mm

APPROVED:	– TOLERANCES –		UNIT: mm	TITLE : mPCIe to Expresscard	SHEET 1/1
ENGINEER:	General	Angles			
	30~ ±0.25	0° ±3°	SCALE: 1:1	DRAWING NUMBER: PE3B_dimension / Date 2011/June/28	SIZE A4
CHECKED:	10~30 ±0.20	0.0° ±2°			
DRAWN: Gerry Chen	5~10 ±0.15			Bplus Technology Co., Ltd.	REV. A/0
	0~5 ±0.10				